W-S Bathkit Bath Kit

Description

Click-clack waste system with overflow that prevents leaks and dampness, a solution designed to ensure waterproofing in site-built bathtubs. Its innovative design enables a perfect bond between the WATER-STOP waterproof membrane and the drain, ensuring long-lasting and efficient protection.

Features

- Waterproofing included
- Technical data
- High drainage capacity
- Available in different colours
- Easy installation

Technical data

- Click-clack valve
- Integrated overflow
- PVD and textured finishes
- Ø40 mm outlet pipe



Manufacturer

Estil Guru S.L.U

P.I. El Pla C/ Telers, 22 - P.O. Box 584, 46870, Ontinyent, Valencia, SPAIN | www.estilguru.com | guru@estilguru.com
Tel. 0034 96 291 45 11 | Fax. 0034 96 236 90 10

Product

Ref.	Description	Finish	W-S membrane
IA11000	W-S Bathkit Inox		2 x 3 · 6 m²
IA11020	W-S Bathkit Gold		2 x 3 · 6 m²
IA11021	W-S Bathkit Dark		2 x 3 · 6 m²
IA11031	W-S Bathkit Chrome		2 x 3 · 6 m²
IA11030	W-S Bathkit White		2 x 3 · 6 m²
IA11034	W-S Bathkit Old Bronze		2 x 3 · 6 m²
IA11022	W-S Bath Inox		-
IA11023	W-S Bath Gold		-
IA11024	W-S Bath Dark		-
IA11026	W-S Bath Chrome		-
IA11025	W-S Bath White		-
IA11029	W-S Bath Old Bronze		-

W-S Bathkit Bath Kit

Technical data

Features

Finish	Stainless Steel / Gold / Dark / Chrome / Old Bronze / White
Body material	Polypropylene
Plug and hair strainer material	Brass
Mechanism	Click-clack
Outlet connection	Ø40
Use	For bathtub drains
Maximum water level above the plug	Max. 600 mm
Bathtub drain length	Max. 680 mm

Technical drawings (mm)

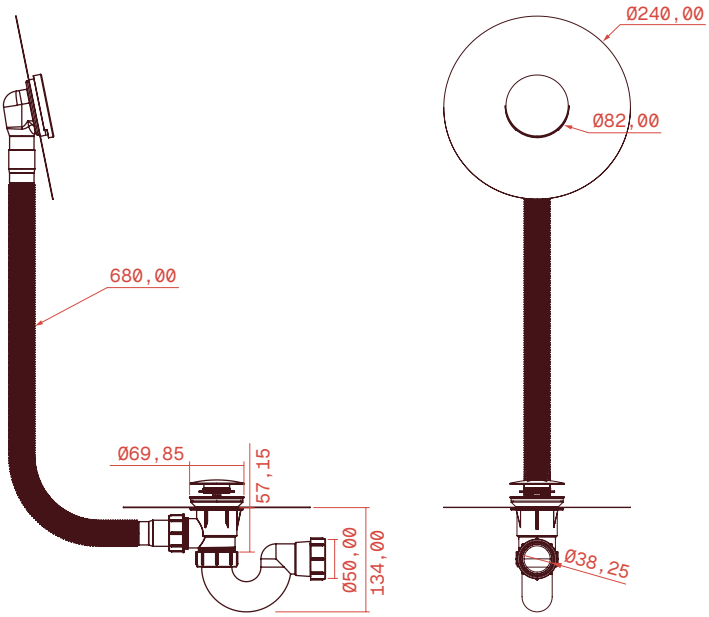

W-S Bathkit Bath Kit

Components

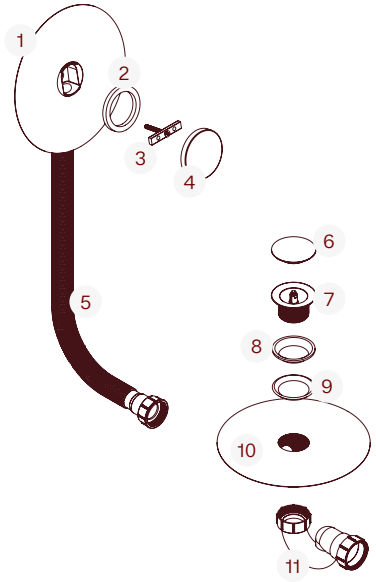

Part	Description	Material
1	Overflow body	PP
2	Adjustment gasket	NBR
3	Fixing plate	Steel
4	Plug	Brass
5	Corrugated pipe	PP
6	Click-clack plug	Brass

Part	Description	Material
7	Upper drain body	Brass
8	Conical gasket	NBR
9	Flat gasket	NBR
10	Lower drain body	PP
11	Trap	PVC